# PHB Single and Demi Filter Housing

Air / gas filtration

- Flow efficient range of air / gas housings specifically designed for food and beverage applications
- Demi (TRUESEAL) and K-40¨(226) housings
- Designed for gas filtration, includes plenum chamber for condensate handling
- Full material traceability
- Food grade compliance to EC1935/2004

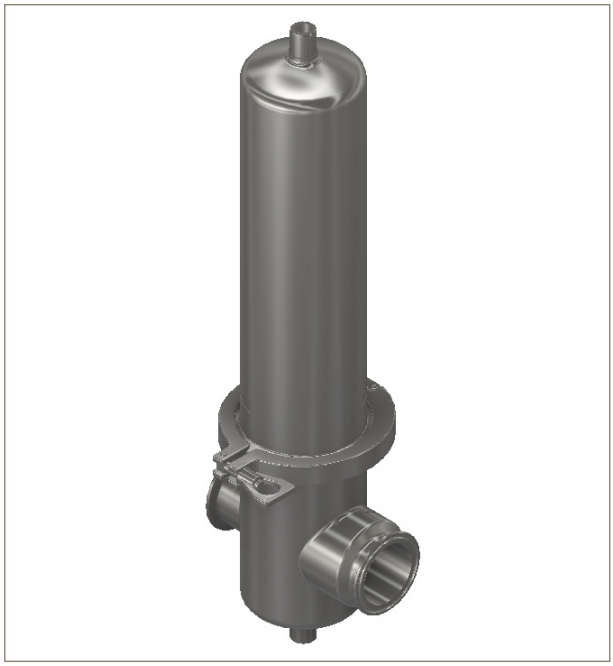

## Specifications

**Materials of Construction**

| | |
|---|---|
| Housing: | 316L/1.4404 |

**Surface Finish**

| | |
|---|---|
| Internal Downstream | Mechanical polishing <0.8µm Ra |
| External: | Mechanical mirror polishing |
| Cartridge Socket: | C style (226), TRUESEAL |
| Number of Cartridges: | 1 |

**Technical Design Data**

| | |
|---|---|
| Design Code: | PED 2014/68/EU |
| PED Category: | Demi, K-20 - SEP (ART 4.3)<br>30¨and 40¨ - CAT 1 |
| PED Fluid Group: | PHB Demi, Group 1&2<br>PHB K-40¨, Group 2 only |
| PED Fluid State: | Gas |
| ATEX Regulation: | Group 2, CAT 2, Gas & Dust<br>Fluid GR IIC, Zone 1 & 21 |
| Design Pressure: | -1 to 10 bar @ -20°C to 150°C |
| Certification: | Supplied as standard with IOMI and vessel inspection certificate |

## Dimensions

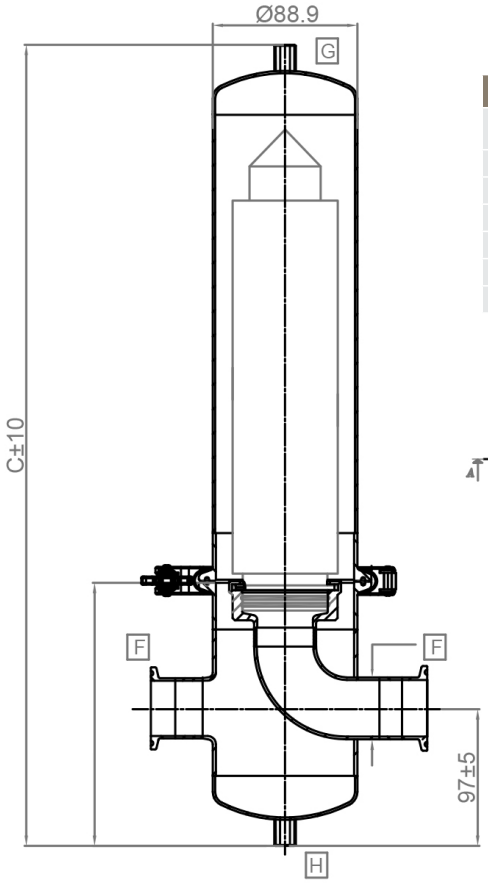


| Model | K | 10" | 20" | 30" | 40" |
|---|---|---|---|---|---|
| Cartridges number x Height (inches) | 0.1 x 05" | 01 x 10" | 01 x 20" | 01 x 03" | 01 x 40" |
| PED category | Art. 4.3 | Art. 4.3 | Art. 4.3 | I | I |
| C mm (with vent) | 380 | 500 | 750 | 1000 | 1250 |
| Total vessel volume litres | 2.2 | 3.0 | 4.0 | 6.0 | 7.0 |
| Bowl weight kg | 0.7 | 1.1 | 1.9 | 2.7 | 3.5 |
| Total net weight kg | 2.6 | 3.0 | 4.0 | 5.0 | 6.0 |
| Total weight packed kg | 3.6 | 4.0 | 5.0 | 6.0 | 7.0 |

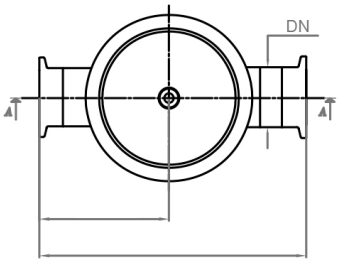


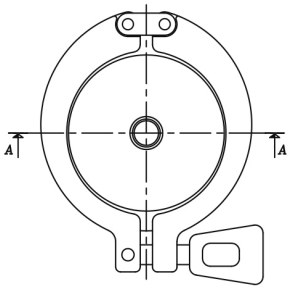


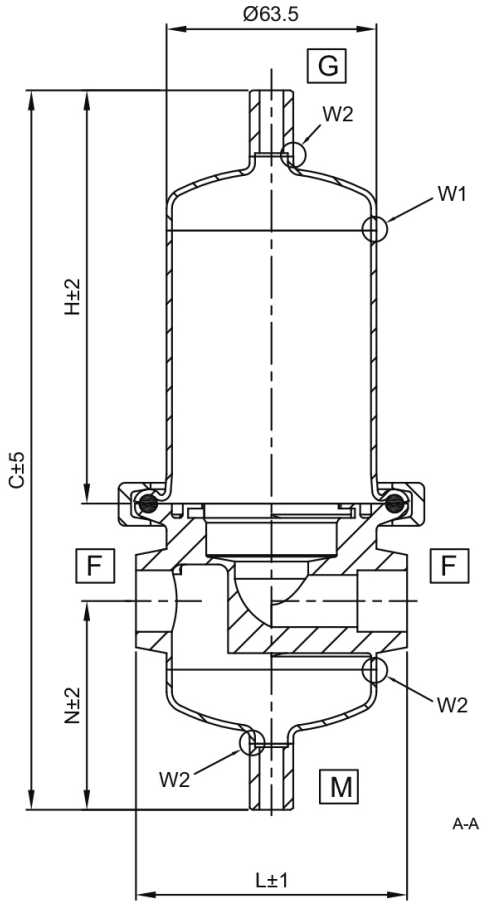


| Dimensional Data | | | | |
|---|---|---|---|---|
| In/out connection | BSPF 1/2" | | BSPF 1.0" | |
| PED Category | Art 4.3 | | Art 4.3 | |
| Cartridge height | 2.5" | 5" | 2.5" | 5" |
| C (mm) | 198 | 254 | 212 | 268 |
| H (mm) | 111 | 167 | 111 | 167 |
| N (mm) | 59 | 59 | 67 | 67 |
| L (mm) | 82 | 82 | 92 | 92 |
| Volume (Litres) | 0.32 | 0.48 | 0.34 | 0.50 |

Parker has a continuous policy of product development and although the company reserves the right to change specifications, it attempts to keep customers informed of any alterations. This publication is for general information only and customers are requested to contact our sales department for detailed information and advice on a products suitability for specific applications. All products are sold subject to the company's standard of sale.

# Ordering Information

## PHB Gas Housing

PHB X XX X X X X X X X X XXXX X

| Code | Cartridge Number |
|---|---|
| 01 | 1 cartridge |

| Code | Socket |
|---|---|
| 7 | Code C |

| Code | Closure |
|---|---|
| C | Clamp |

| Code | Vent |
|---|---|
| 7 | 1/4¨BSPF |

| Code | Internal Roughness * |
|---|---|
| 8 | Ra<0.8 micron |

| Code | Plugs |
|---|---|
| 0 | No plugs |

| Code | Pressure rating |
|---|---|
| 0 | 10 bar |

| Code | Length (Nominal) |
|---|---|
| K | 5 ¨ (125mm) |
| 1 | 10 ¨ (250mm) |
| 2 | 20¨ (500mm) |
| 3 | 30¨ (750mm) |
| 4 | 40¨ (1000mm) |

| Code | Gasket Material |
|---|---|
| S | Silicone |

| Code | Drain |
|---|---|
| 7 | 1/4¨BSPF |

| Code | Finishing |
|---|---|
| M | Mechanical polish |

| Code | Inlet / Outlet |
|---|---|
| T015 | Clamp ASME BPE 1.5¨ |
| T020 | Clamp ASME BPE 2¨ |
| W038 | Weld ASME BPE 38.1 x 1.65 |
| W051 | Weld ASME BPE 50.8 x 1.65 |
| D040 | DIN 11851 DN40 |
| D050 | DIN 11851 DN50 |

## PHB Demi Gas Housing

PHB X XX X X X X X X X X XXXX X

| Code | Cartridge Number |
|---|---|
| 01 | 1 cartridge |

| Code | Socket |
|---|---|
| T | TRUESEAL |

| Code | Closure |
|---|---|
| C | Clamp |

| Code | Vent |
|---|---|
| 7 | 1/4¨BSPF |

| Code | Internal Roughness * |
|---|---|
| 8 | Ra<0.8 micron |

| Code | Plugs |
|---|---|
| 0 | No plugs |

| Code | Pressure rating |
|---|---|
| 0 | 10 bar |

| Code | Length (Nominal) |
|---|---|
| A | 5¨ (127mm) |
| B | 2.5 ¨ (64mm) |

| Code | Gasket Material |
|---|---|
| S | Silicone |
| E | EPDM |
| V | Viton |
| P | FEP+ Silicone |

| Code | Drain |
|---|---|
| 7 | 1/4¨BSPF |

| Code | Finishing |
|---|---|
| M | Mechanical polish |

| Code | Inlet / Outlet |
|---|---|
| B005 | BSP female 1/2¨ |
| B010 | BSP female 1¨ |

** Internal roughness 0.8µm Ra is guaranteed on downstream only.*

*Vent and drain plugs/blanks not supplied as standard, available as separate parts.*

Parker has a continuous policy of product development and although the company reserves the right to change specifications, it attempts to keep customers informed of any alterations. This publication is for general information only and customers are requested to contact our sales department for detailed information and advice on a products suitability for specific applications. All products are sold subject to the company's standard of sale.